www.BarDyne.com

HyPneu®

For Windows

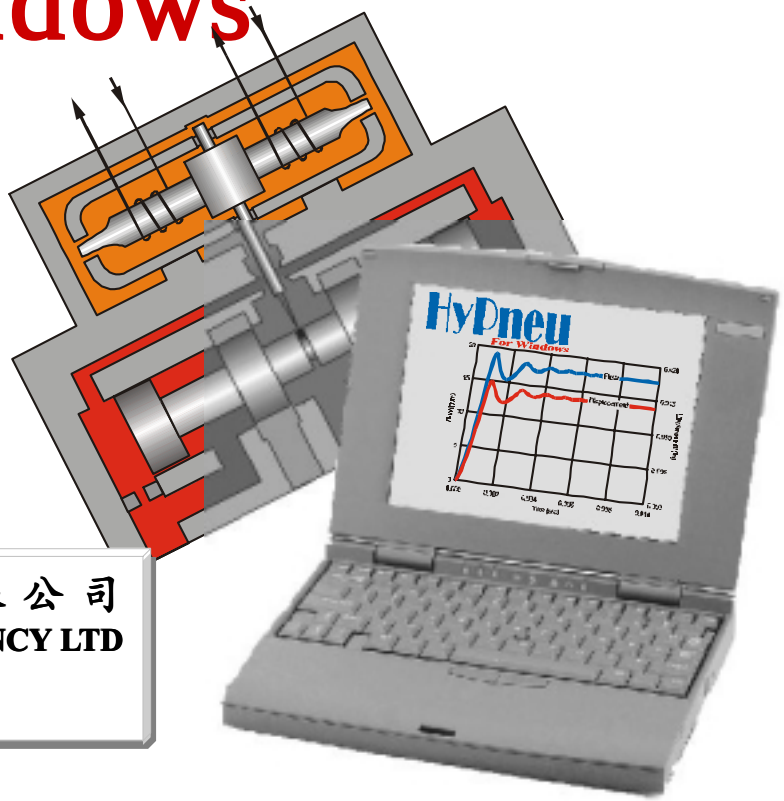

BarDyne, Inc.
Stillwater, Oklahoma
U.S.A.

維 美 系 統 顧 問 有 限 公 司
V&M SYSTEMS CONSULTANCY LTD
TEL:886-2-88098037
http://www.vmc.com.tw

Design Components

Use HyPneu's generic models (e.g., springs, dampers, mass, friction, orifices, load, etc.) to develop any component model desired without programming. In addition, you can create your own mathematical models to be used by HyPneu. Or, you may use a combination of the HyPneu models and your own models. HyPneu features permit this unique component design to be stored as a new sub-system. This sub-system can be enhanced through the addition of other components to form the system desired.

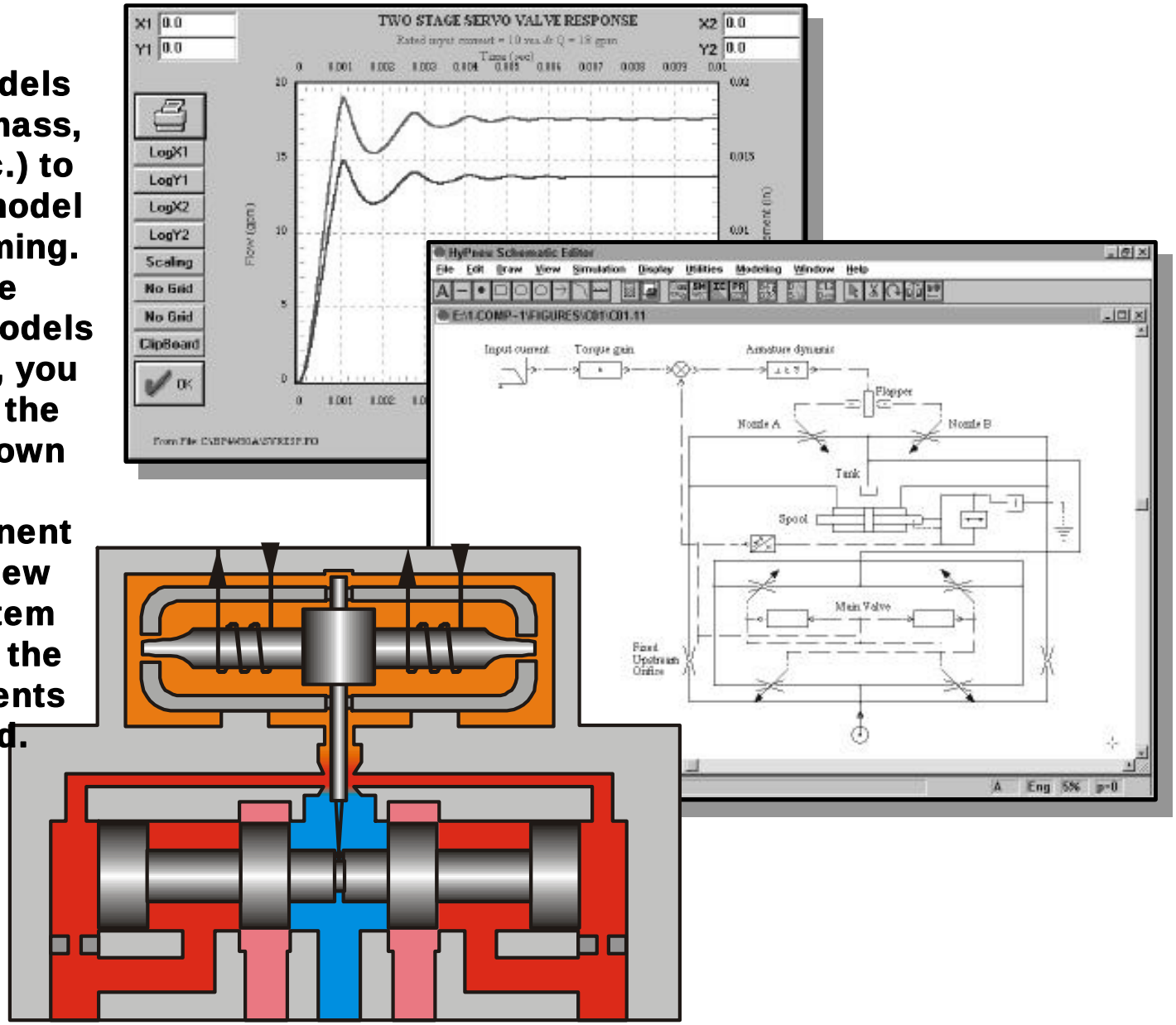

HyPneu® For Windows

Analyze System Dynamic and Steady State

System designing is like putting a puzzle together. Using HyPneu, the vast majority of your puzzle pieces are at your finger tips. The building blocks available to you through this powerful software, make the task of system design enjoyable as well as comprehensive. Creative designs can be stored to form the basis for future designs to save an increasing amount of time and money. Solve big system design problems with a little computer.

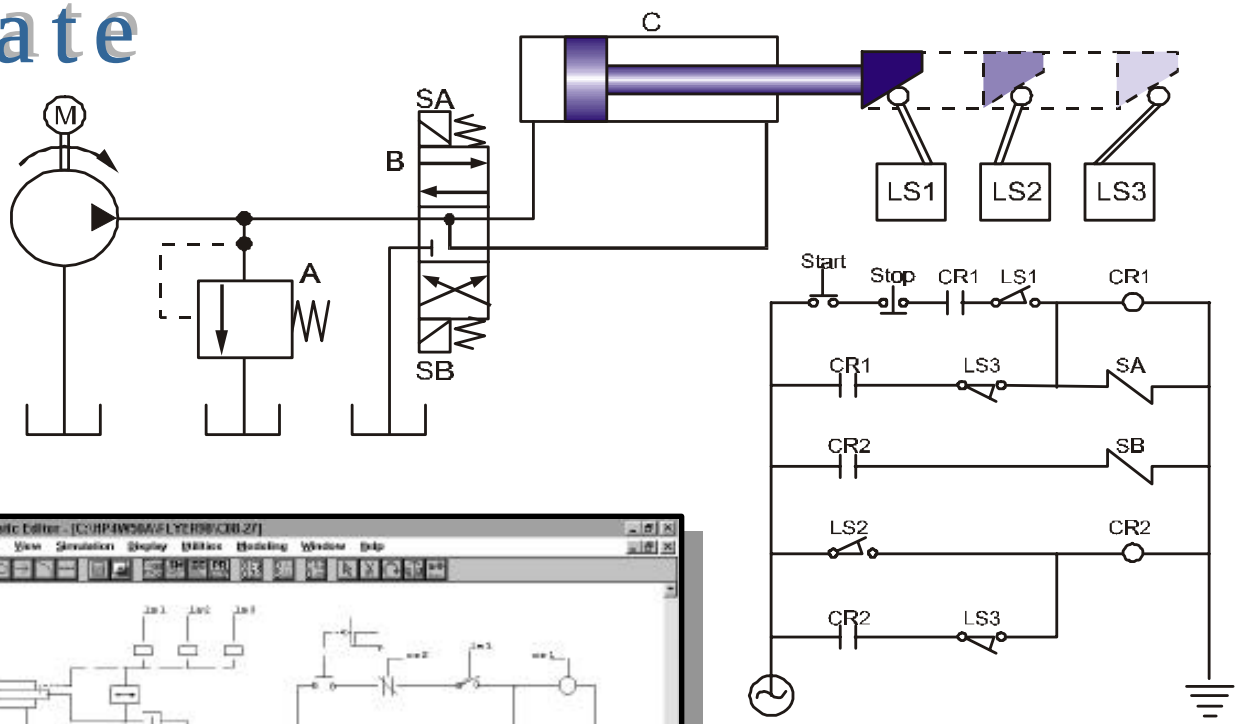

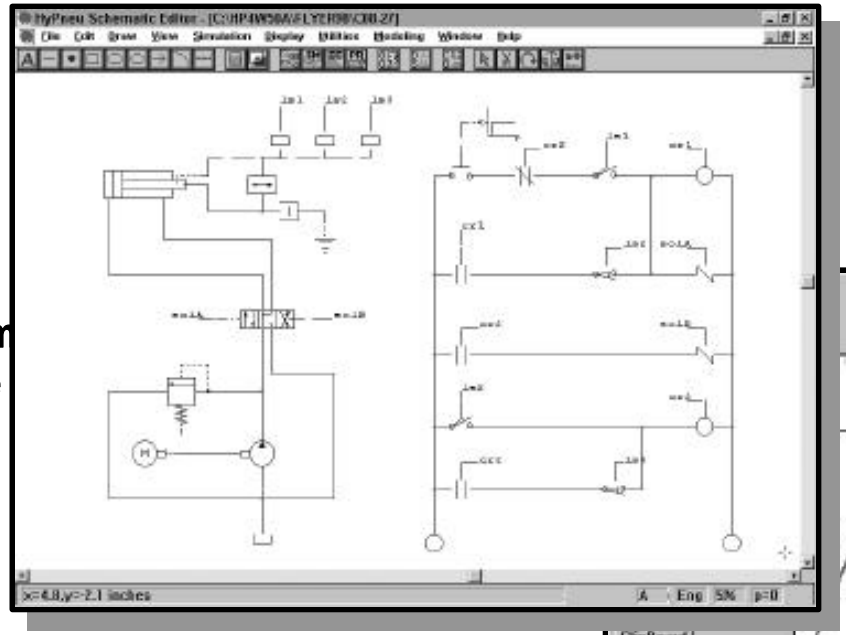

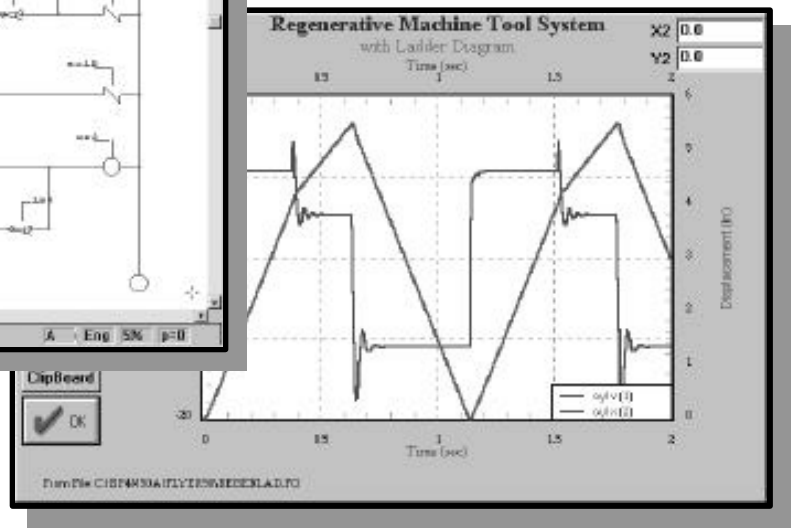

HyPneu® For Windows

Critical Operations Analysis

The fear of overlooking crucial instabilities in critical operations can become a thing of the past by using HyPneu. An engineer's nightmare can be in the form of water hammer, limit cycles, unintended dithering, or end of stroke impact. With HyPneu these nightmares will be apparent during analysis on your PC months before components are built or procured and installed.

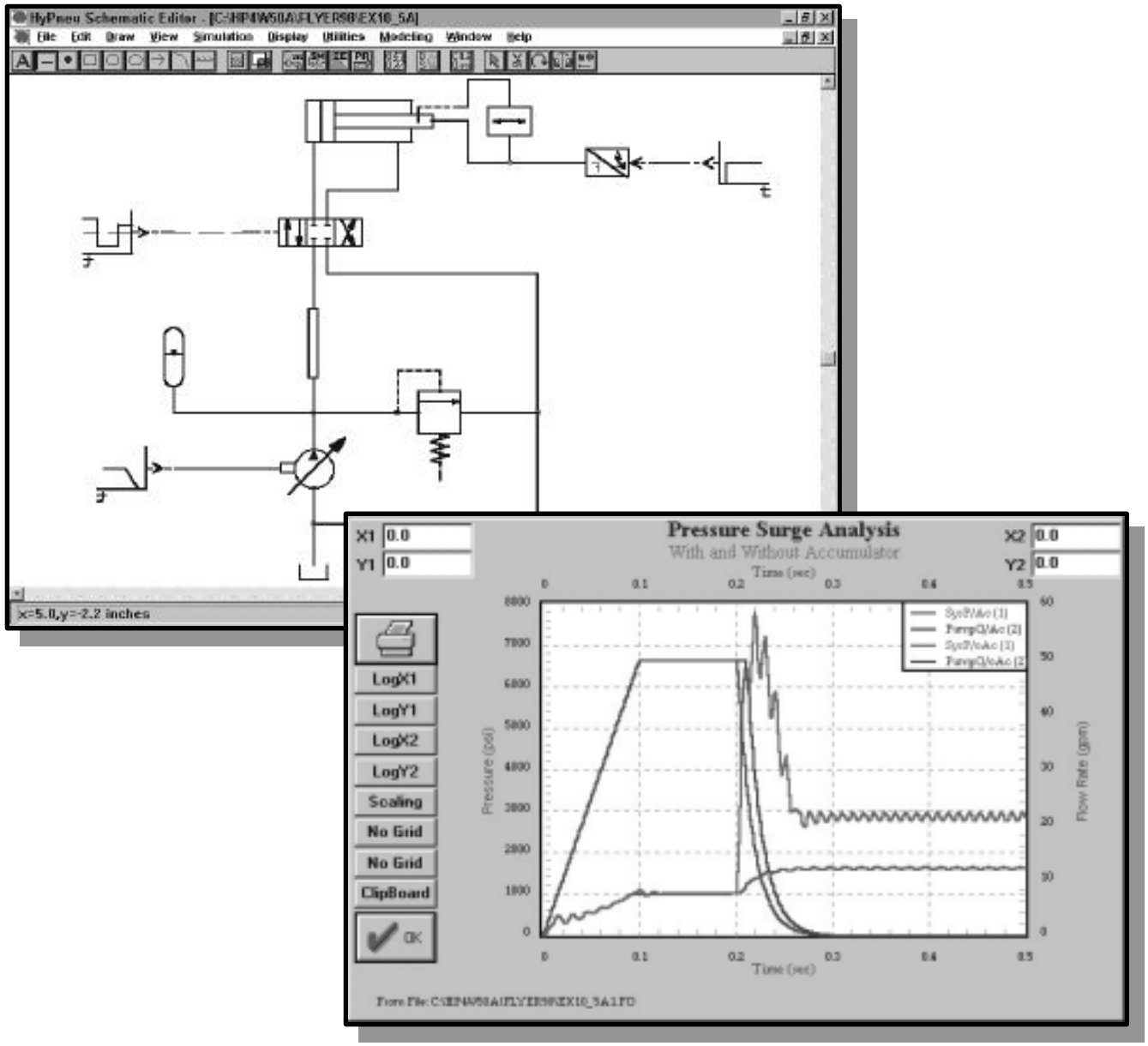

HyPneu® For Windows

Pneumatic System Analysis

Pneumatic systems are widely used in today's environment. For example, to meet the demand for environmentally friendly fuel systems on automobiles, a fuel vapor management system was created. These systems are simply low pressure pneumatic systems. In addition, automobile air suspension systems and the rapid development of robotic applications have accelerated the need for analysis of pneumatic systems. The dynamic analysis of pneumatic systems is especially difficult due to the highly compressible characteristics of the medium. HyPneu easily handles these complexities so that all the user needs to do is place a pneumatic icon in the system and tell HyPneu to "run."

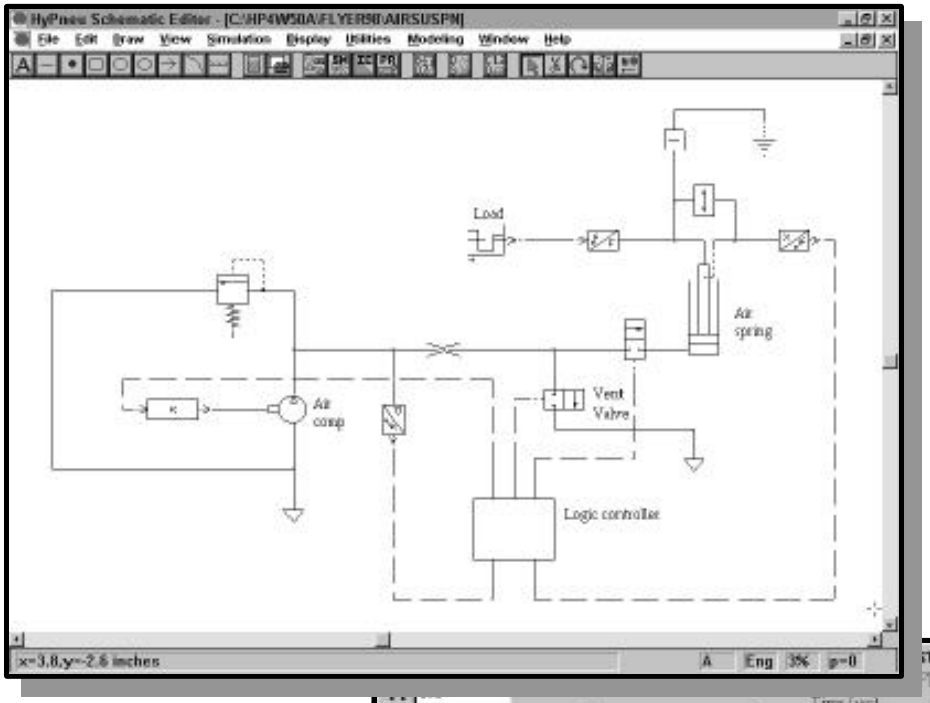

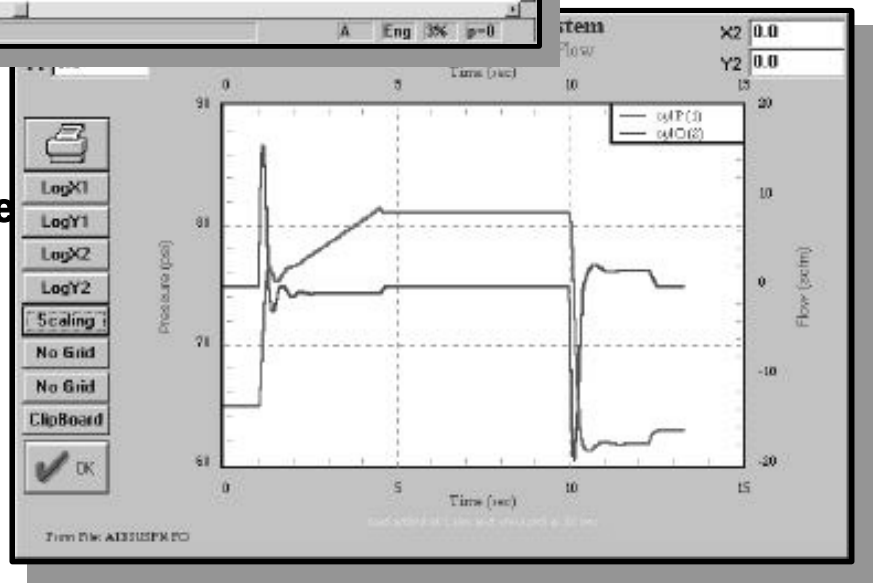

HyPneu® For Windows

Thermal Duty Cycle

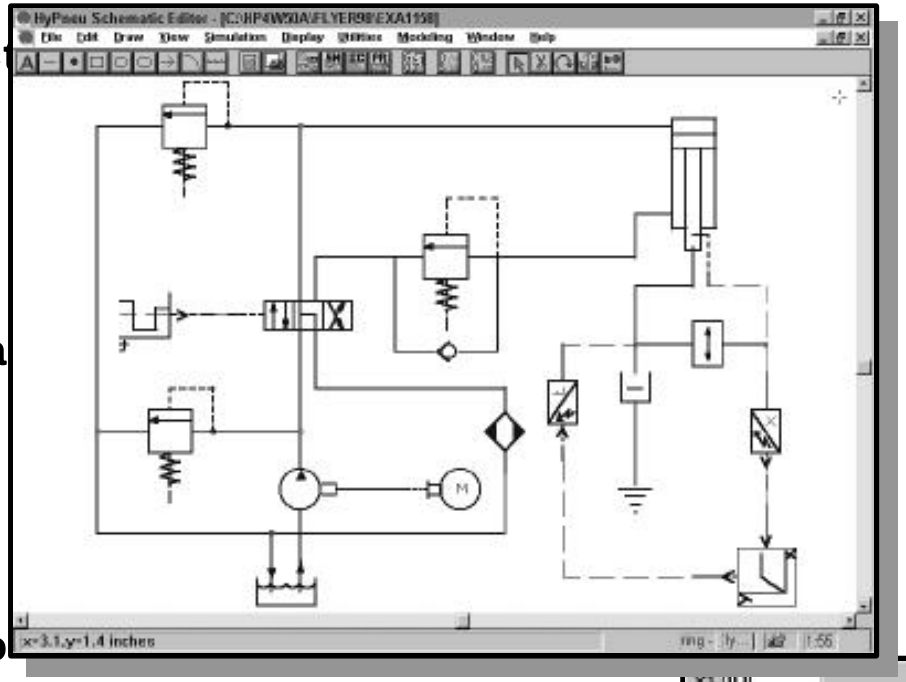

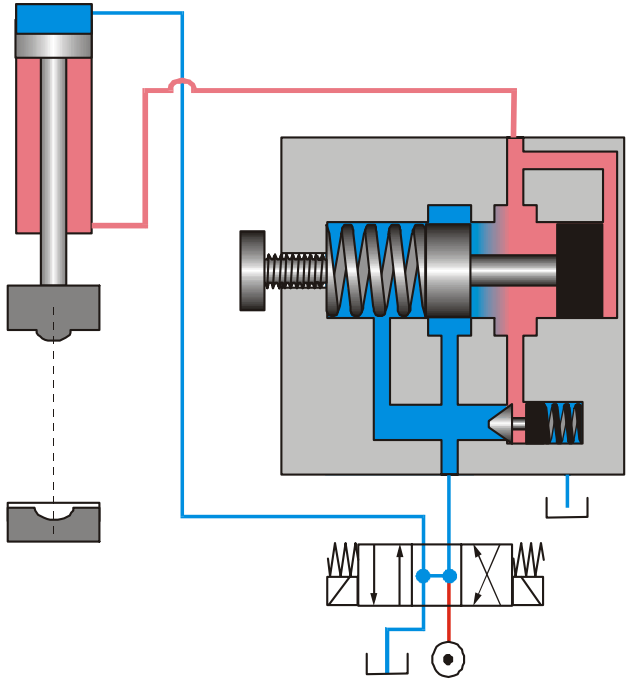

The ability to predict the temperature of circulating fluid at any point in the system, along with the temperature of the components in a hydraulic circuit at the design stage, are crucial to service assurance. Temperature that is either too low or too high will potentially cause excessive performance degradation and component malfunction. HyPneu can directly perform dynamic and steady state thermal analysis using any circuit created schematically. Not only can HyPneu evaluate pressure and flow in a fluid power system, but it can also assess the temperature profile of the fluid and components under any work cycle.

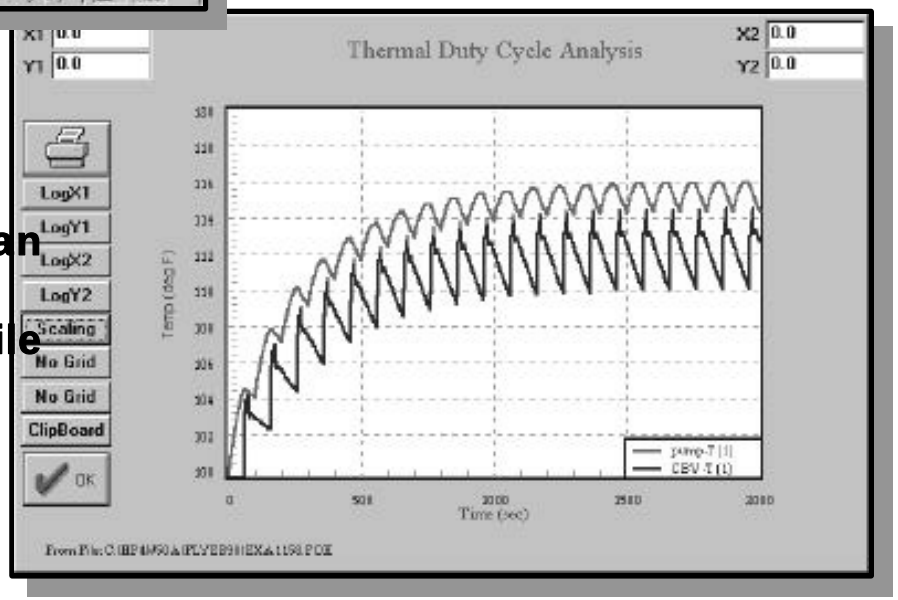

HyPneu® For Windows

Frequency Response Analysis

In many systems, frequency response is a significant design consideration. With the introduction of HyPneu, it is no longer necessary to perform time-consuming and complicated (even unreasonable) mathematical model derivation. Now, all of these can be performed with a single key stroke without involving transfer function formulation. Certainly if a transfer function is available, HyPneu is perfectly capable of using it. Frequency analysis can even become enjoyable, not burdensome.

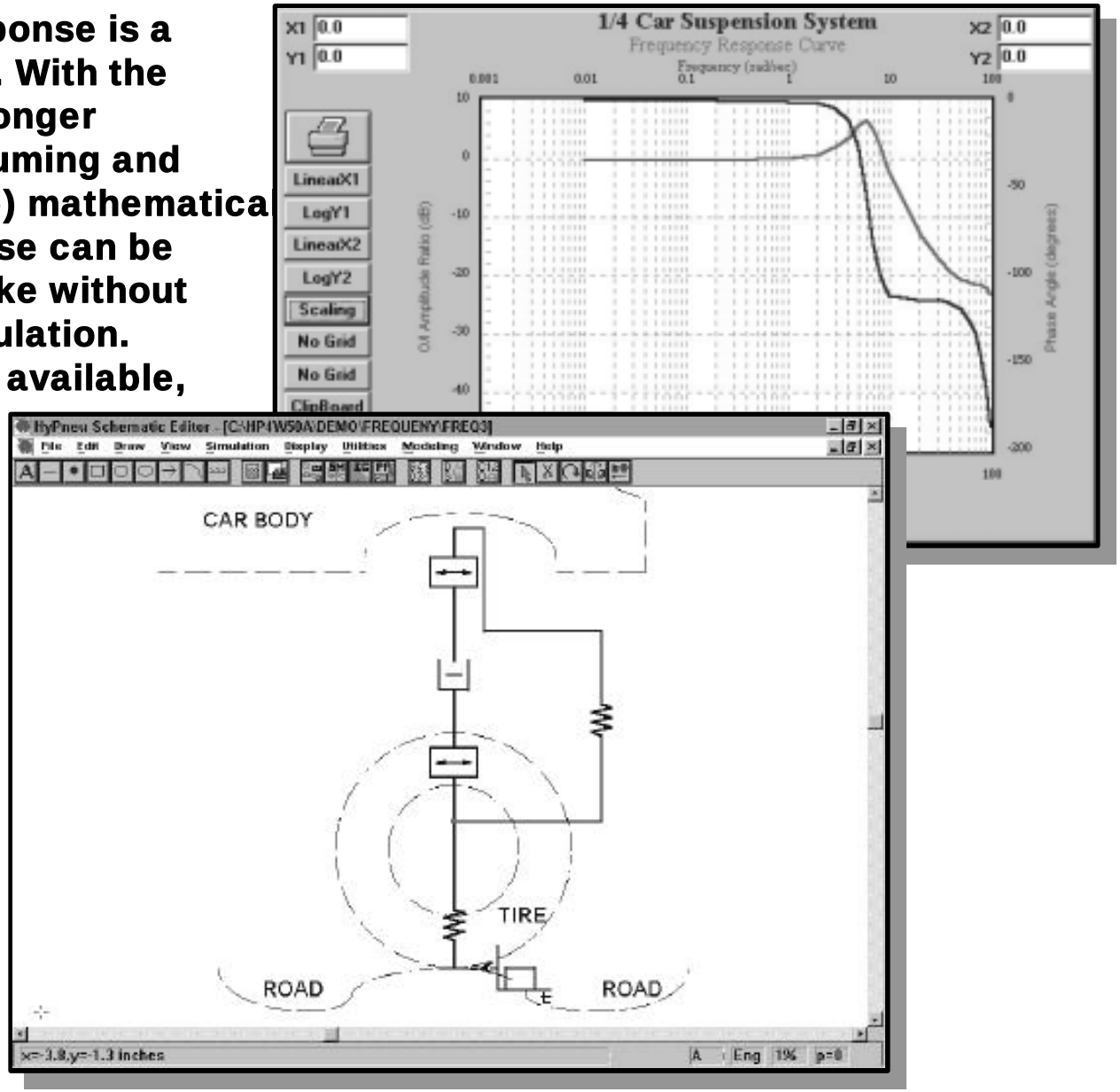

HyPneu® For Windows

Frequency Power Analysis

The minimization of vibration and noise in the operation of a fluid power system is a very critical design and maintenance goal. The causes of erratic motion of actuators and vibration of connecting lines can be a nightmare to spot. Directly from the circuit schematic, HyPneu identifies these source of noise and vibration using the Power Spectral Density (PSD) technique. This technique evaluates a signal such as pressure using a narrow band analysis swept over a broad band of frequencies. HyPneu is an extremely useful tool to assure a smooth and noise free hydraulic system.

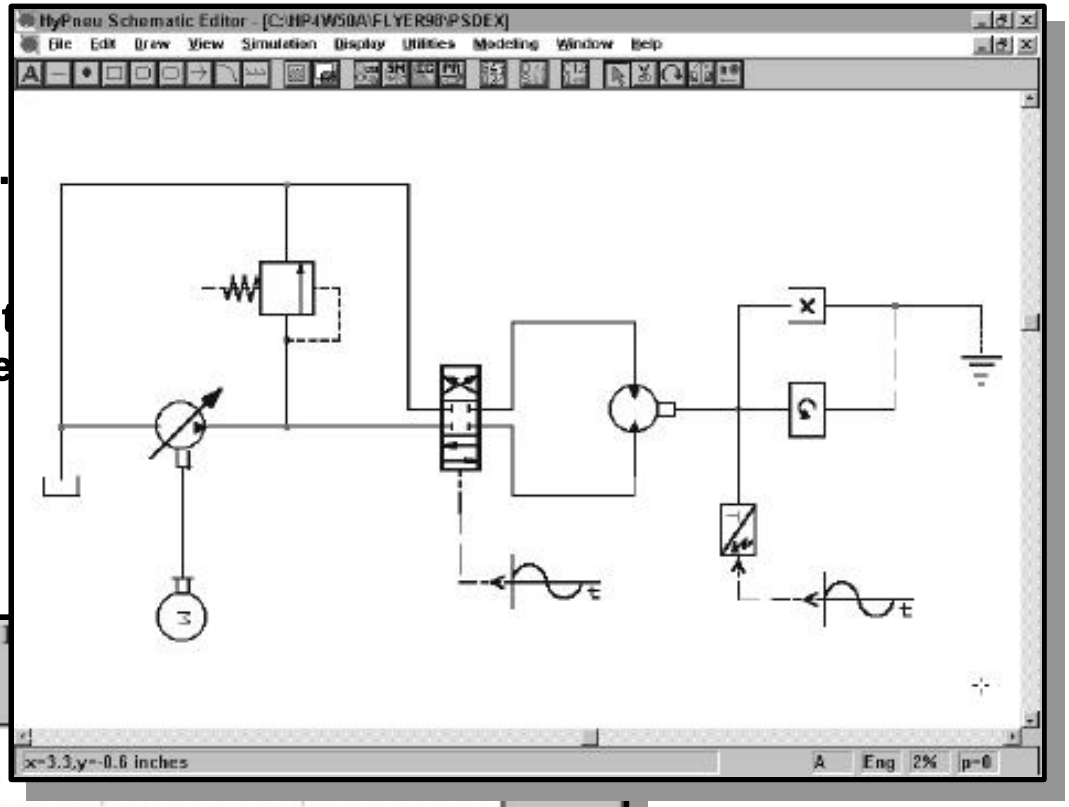

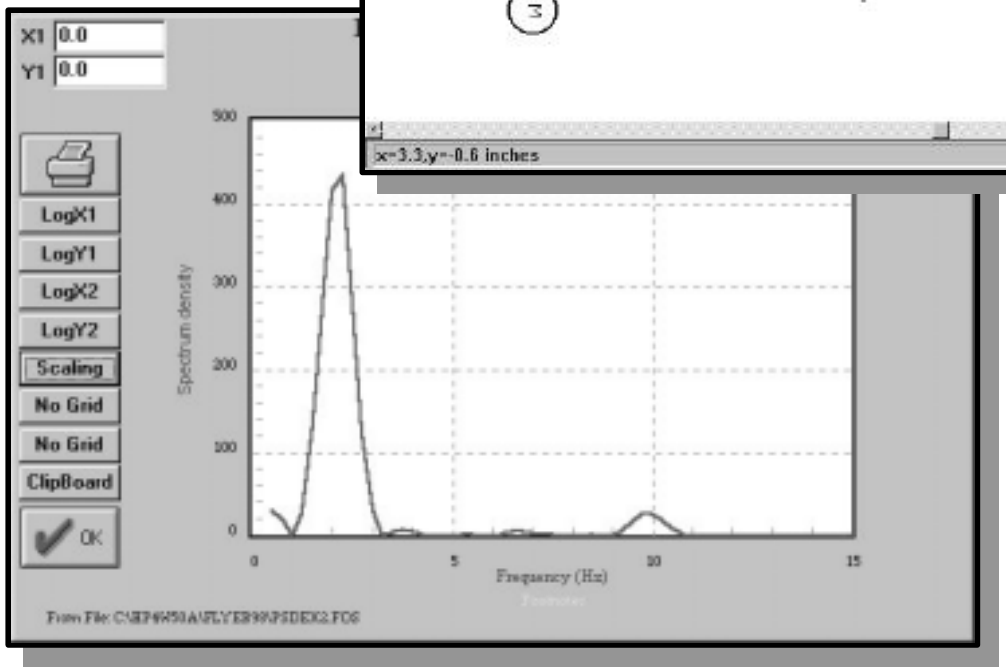

HyPneu® For Windows